CP7912-0000, CP7912-0001
with
C9900-E758
C9900-M205

connection-console (by customer)
Rittal CP6206.490
Rittal CP6508.020

main dimensions and fixing points

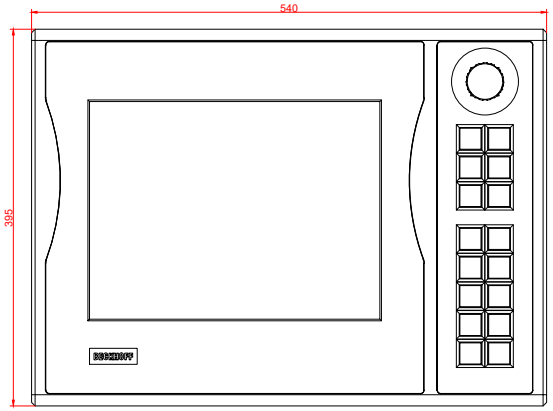

front view

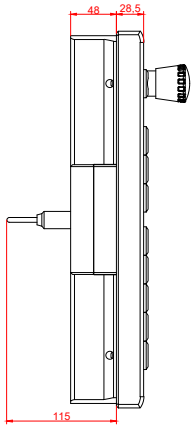

side view

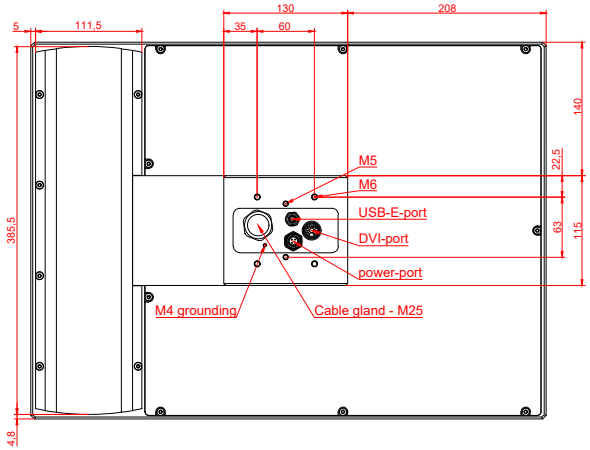

rear view

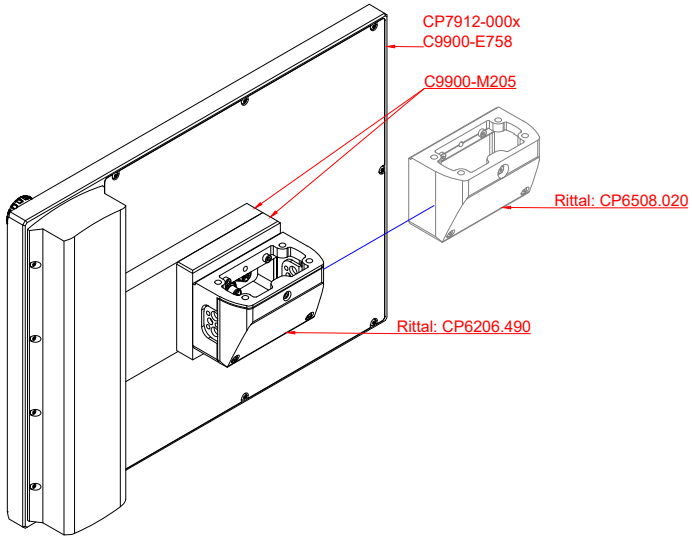

mounting arm adapter from top

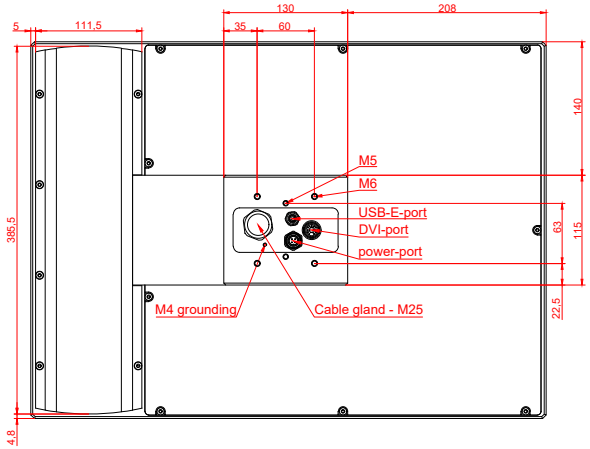

rear view

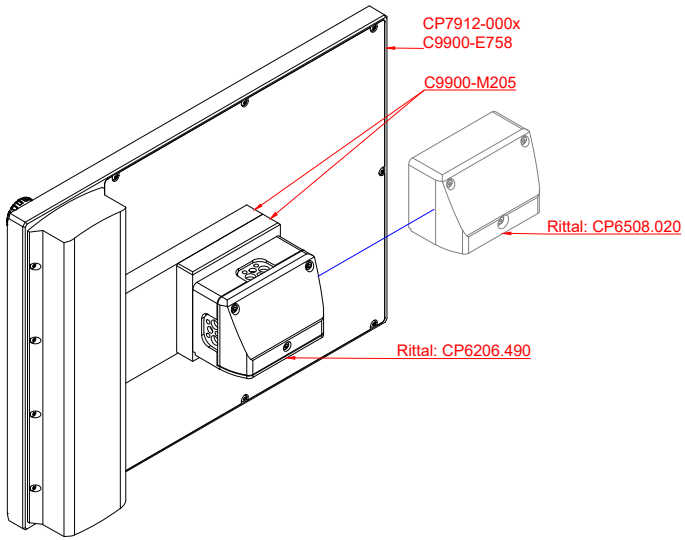

mounting arm adapter from bottom