CP6320-0000-D100/D106-M262-M261

main dimensions

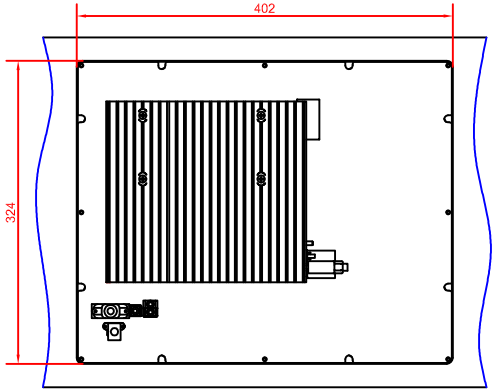


rear view with
install measure

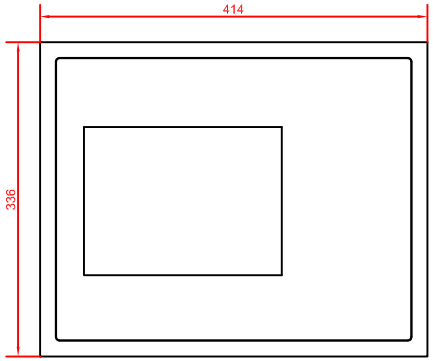


front view

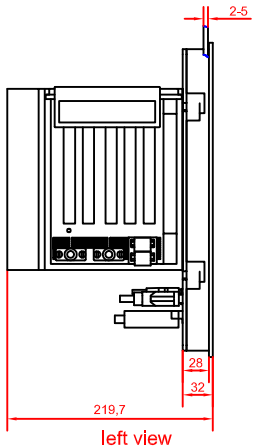


left view

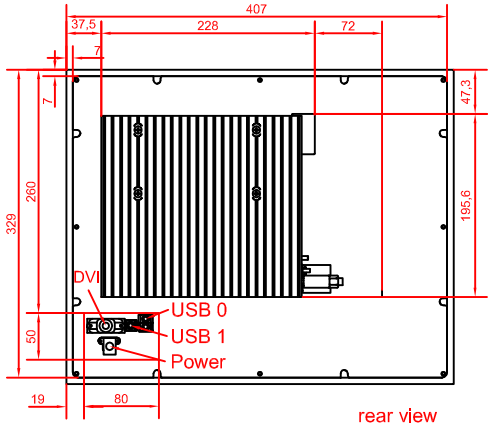


dimensions in mm

rear view